TONA®
Bathroom Furniture

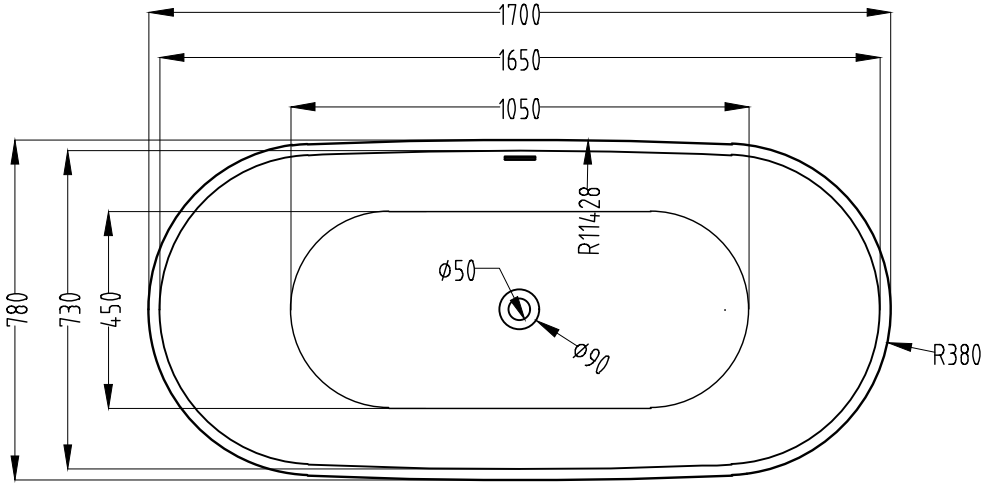

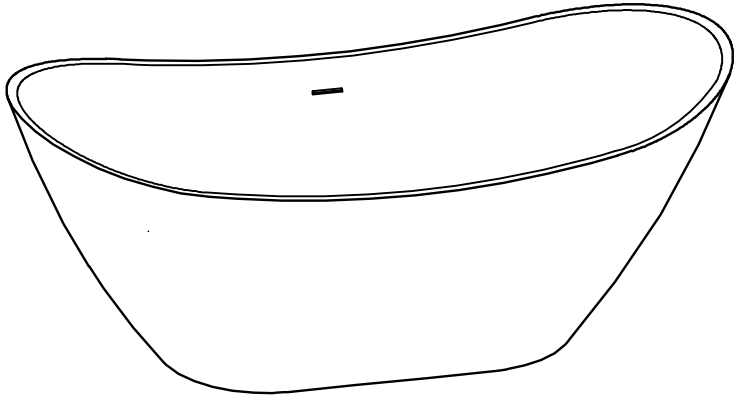

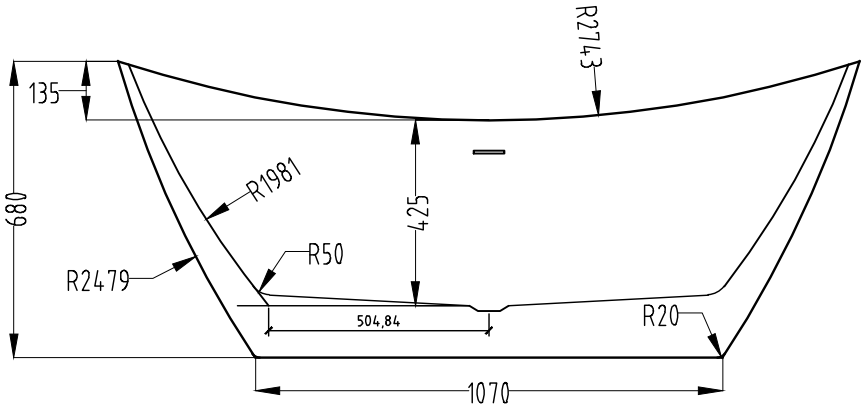

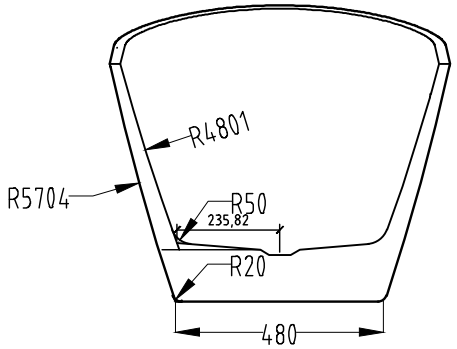

Designer: SH
2022-06-09